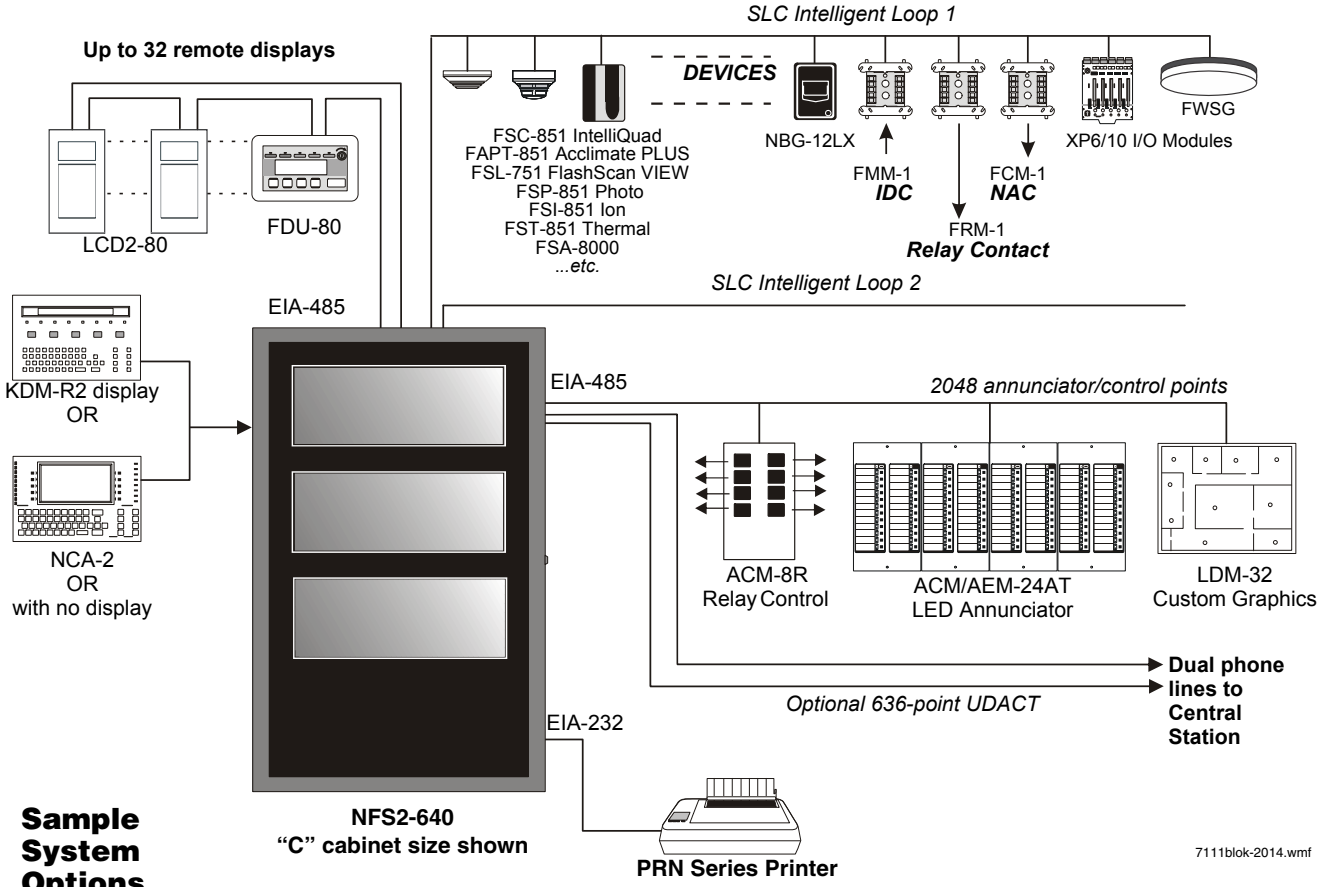

Sample System Options